MHT *Evolution*

THE HIGH CAPACITY HANDLING Solution

TECHNICAL DATA

NEW

SAIE 2011
INTERNATIONAL BUILDING EXHIBITION

MHT **10180**

MHT **10225**

MANITOU

MHT Evolution

	MHT 10180	MHT10225
Lifting capacity		
CDG 600 mm	**18000 kg**	-
CDG 900 mm	-	**22500 kg**
CDG 1200 mm	14000 kg	18500 kg
Lifting height	9.7 m	
Time: laden/ unladen (in s)		
Raise	25.00	32.00
Lower	17.00	18.50
Deploy telescope	14.00	
Retract telescope	11.00	
Tyres	445/95 R25 XLB	23,5 R25 XLB ou 18 R25 XZM2
Forks (mm)		
Length x width x thickness	1500 x 200 x 80	1800 x 250 x 100
Braking		
Service brake	multiple-disc brakes hydraulically assisted on front and rear axles	
Parking brake	negative	
MERCEDES MTU Engine	OM 904	
Capacity	4 cyl. - 4250 cm³	
Power at 2200 rpm (ISO/TR 14396)	175 HP/129 kW	
Max. torque at 1200 rpm - 1600 rpm	675 Nm	
Injection	direct	
Cooling	water	
Transmission	hydrostatic with automatic power regulation (hydraulic variable displacement pump and motor)	
Reversing shift	electromagnetic	
Number of gears (forward/reverse)	2/2	
Max. travel speed	25 km/h	
Rear axle	OMCI Heavy Duty (type stacker)	
Frame levelling	10°/10°	5°/5°
Steering mode	4 wheel steer / 4 wheel drive 3 steering mode	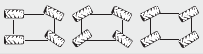
Hydraulics		
Pump (Piston Load Sensing)	170 l/min - 350 bar	
Control	joysticks JSM (Joystick Switch and Move)	
Capacities		
Cooling system	16 l	
Engine oil	16 l	
Hydraulic oil	200 l	
Fuel tank	200 l	
Unladen weight (with forks)	24080 kg	29800 kg
Width overal	2.50 m	2.66 m
Height overal	2.93 m	2.96 m
Length (forks carriage)	6.60 m	6.86 m
Ground clearance	0.45 m	0.47 m
Drawbar pull	15500 daN	17400 daN

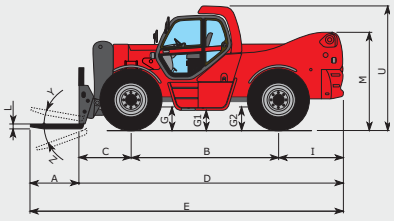

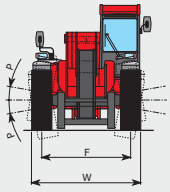

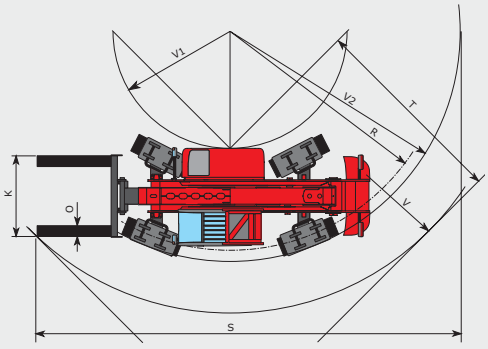

mm	MHT 10180	MHT 10225
A	1500	1800
B	3650	
C	1335	1350
D	6605	6860
E	8105	8660
F	2070	
G	685	510
G1	445	470
G2	685	510
I	1620	1860
K	1750	2000
L	80	100
M	2300	2325
O	200	250
P	10°	4°
R	5445	5750
S	10345	12030
T	4255	5040
U	2935	2960
V	6810	7280
V1	2870	3160
V2	5685	6050
W	2500	2660
Y	12°	
Z	105°	

CE

This publication in no way constitutes an offer and the company reserves the right to alter specification without prior notice.
The MANITOU models presented in this brochure can be supplied complete with optional equipment attachments.

ROUGH TERRAIN LOAD CHART (UNDER EN 1459 ANNEXE B)

MHT 10180

CDG 600 MM

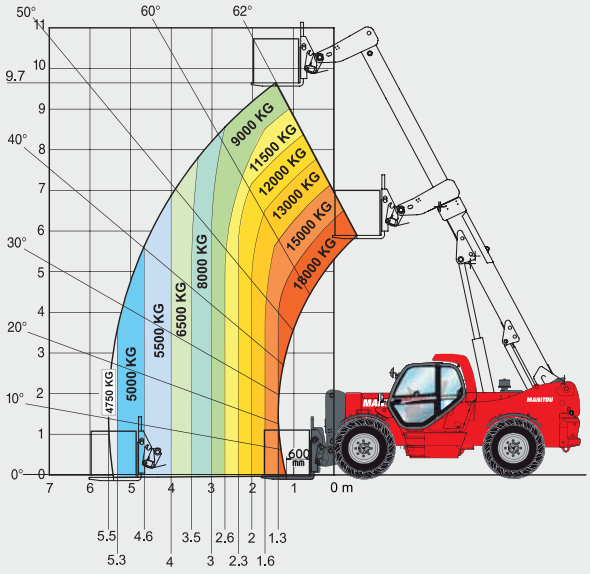

CDG 1200 MM

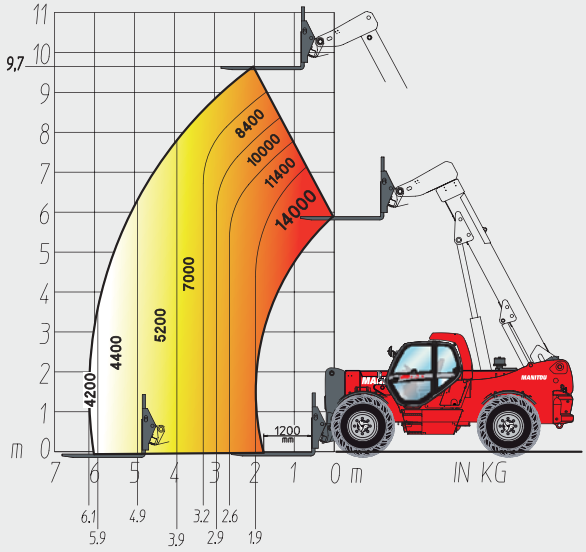

MHT 10225

CDG 900 MM

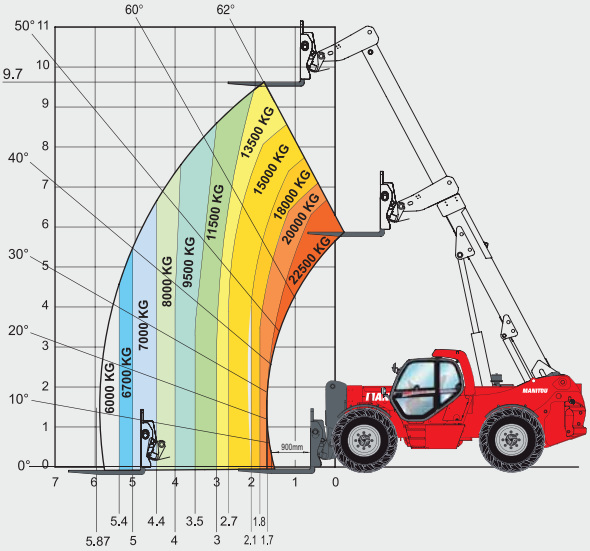

CDG 1200 MM

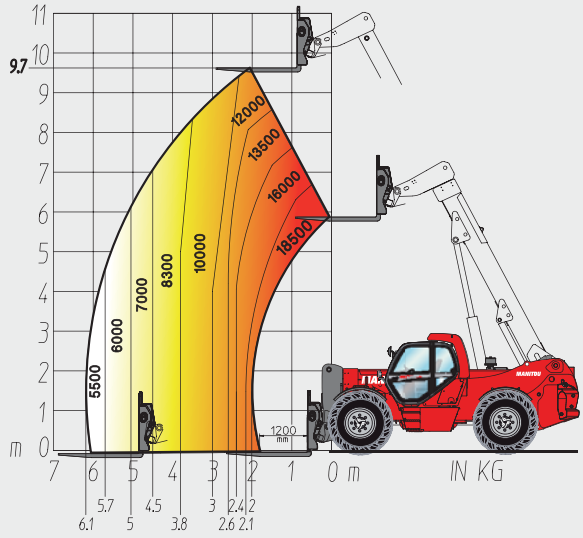

Abroad choice of attachment suitable for industry, construction and mining market's is available : cylinder clamps, hook, tyres clamp, bucket, jib, platforms...

Your nearest MANITOU dealer:

Head office:
B.P. 249 - 430 rue de l'Aubinière - 44158 Ancenis Cedex - France
Tél.: 00 33 (0)2 40 09 10 11 - Fax: 00 33 (0)2 40 83 36 88
www.manitou.com

This brochure describes versions and configuration options for Manitou products which may be fitted with different equipment. The equipment described in this brochure may be standard, optional or not available depending on version. Manitou reserves the right to change the specifications shown and described at any time and without prior warning. The manufacturer is not liable for the specifications given. For more information, contact your Manitou dealer. Non-contractual document. Product descriptions may differ from actual products. List of specifications is not comprehensive. The logos and visual identity of the company are the property of Manitou and may not be used without authorisation. All rights reserved. The photos and diagrams contained in this brochure are provided for information only.

MANITOU BF SA - Limited company with board of directors - Share capital: 39,547,824 euros - 857 802 508 RCS Nantes

MHT10180_10225_EN_A_0911.indd